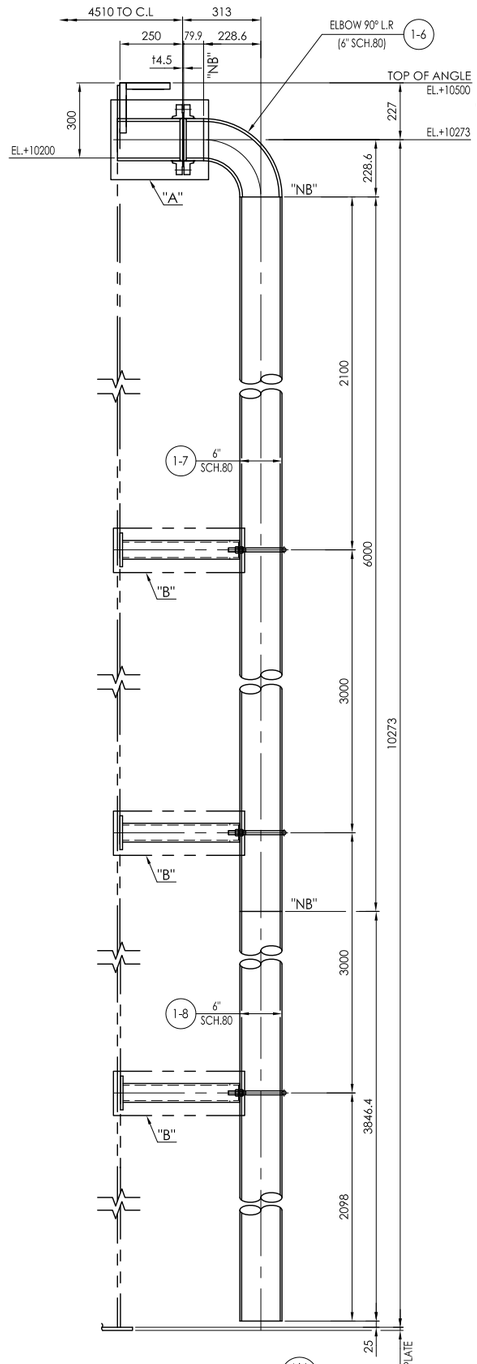

DETAIL OF NOZZLE N4 6"

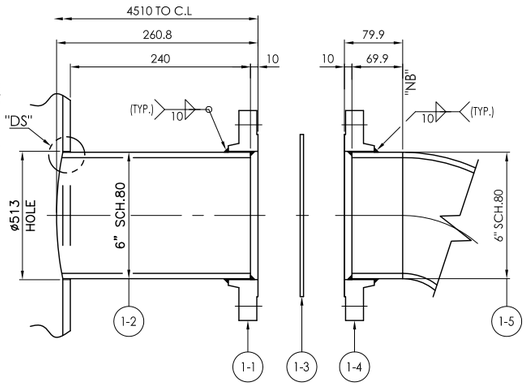

DETAIL "A"

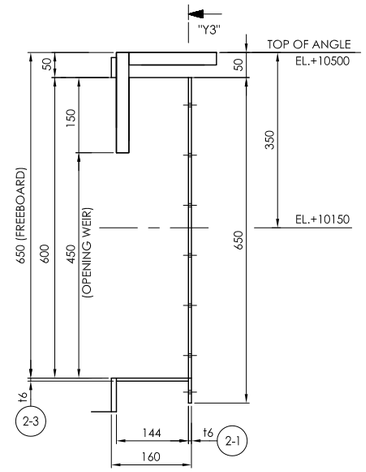

VIEW "Y2"

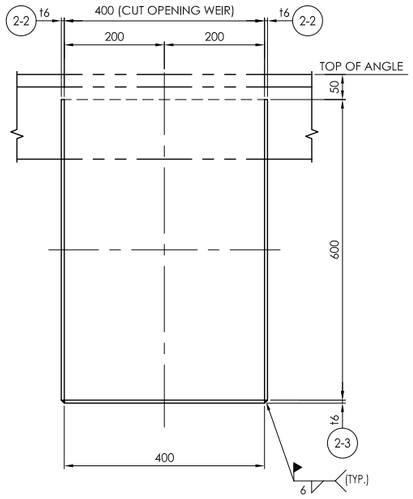

VIEW "Y3"

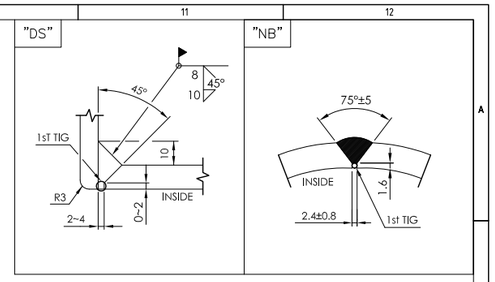

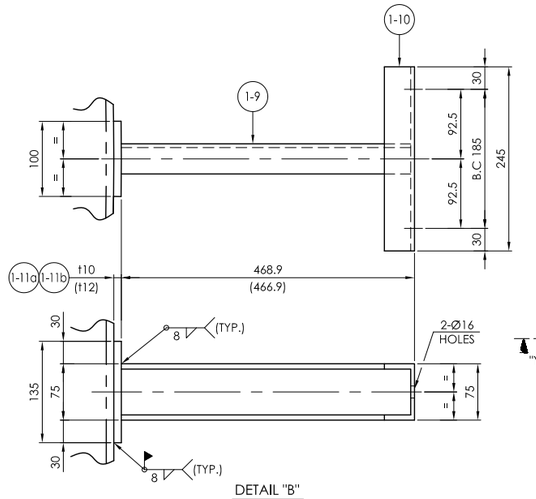

DETAIL "B"

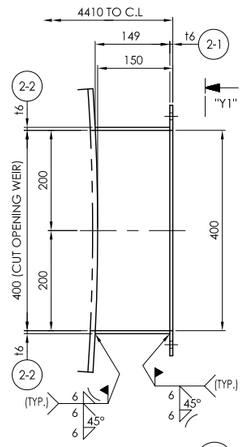

DETAIL OF NOZZLE N2 400x600

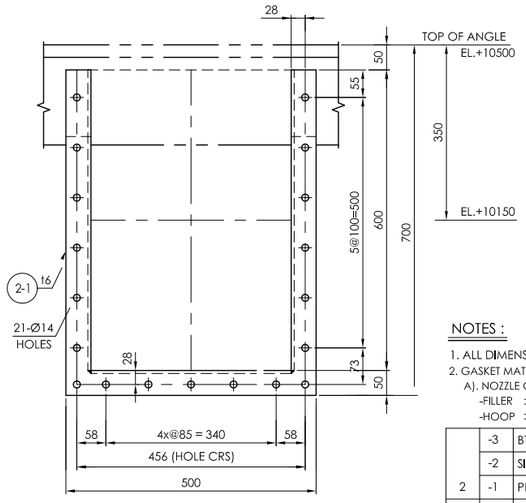

VIEW "Y1"

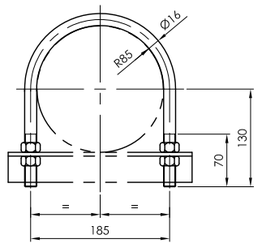

DETAIL OF U-BOLT 1-12

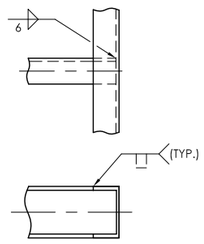

DETAIL JOINT CHANNEL

NOTES :

1. ALL DIMENSIONS ARE IN MM UNLESS OTHERWISE SPECIFIED.
2. GASKET MATERIAL :
   A). NOZZLE GASKET : SPIRAL WOUND (14.5)
   -FILLER : FLEXIBLE GRAPHITE -INNER RING : C.S
   -HOOP : 316 S.S -OUTER RING : C.S

ITEM NO.		NAME OF PART	MATERIAL	Q'TY	CONST.& COMM.	2 YEARS OPER.	UNIT (EA)	REMARKS
	-3	BTM. WALL BOX	ASTM A36	1				t6
	-2	SIDE WALL BOX	ASTM A36	2				t6
2	-1	PLATE FLANGE	ASTM A36	1				t6
	-12	U-BOLT/2NUTS	A36	3				M16 (6")
	-11b	REINF. PAD	ASTM A36	1				t12
	-11a	REINF. PAD	ASTM A36	2				t10
	-10	SUPORT CHANNEL	ASTM A36 OR EQ.	3				[-75x40x5x7
	-9	SUPORT CHANNEL	ASTM A36 OR EQ.	3				[-75x40x5x7
	-8	NOZZLE NECK	ASTM A106 Gr.B	1				6" SCH.80
	-7	NOZZLE NECK	ASTM A106 Gr.B	1				6" SCH.80
	-6	ELBOW 90° L.R	ASTM A234 Gr.WPB	1				6" SCH.80
	-5	NOZZLE NECK	ASTM A106 Gr.B	1				6" SCH.80
	-4	FLANGE	ASTM A105	1				6" ASME #150 S.O.R.F
	-3	GASKET	NOTE 2	1				t4.5 ASME #150 R.F
	-2	NOZZLE NECK	ASTM A106 Gr.B	1				6" SCH.80
1	-1	FLANGE	ASTM A105	1				6" ASME #150 S.O.R.F
PART CODE					SPARE			

(1) SET TO BE MANUFACTURED

REV	DATE	DESCRIPTION	DRN	CKD	DESIGN ENG	LEAD ENG	PROJ APP	CLIENT APP'D
00	01/08/26	FINAL	INK	HER	DS	HK	MS	-
B	03/11/25	ISSUED FOR APPROVAL	INK	HER	DS	HK	MS	-
A	14/10/25	ISSUED FOR APPROVAL	INK	HER	DS	HK	MS	-

REVISIONS

CPM PT Citra Palu Minerals

	NAME	DATE
DRAWN	INKO	14/10/25
CHECKED	-	-
DESIGN ENG	-	-
LEAD ENG	-	-
PROJ APP'D	-	-
CLIENT	-	-

COMO ENGINEERS
L2, 38 RICHARDSON ST WEST PERTH, WESTERN AUSTRALIA 6005
+61 8 9432 0100
www.comoeng.com.au

PT.HANAZONO ENGINEERING INDONESIA

PLOT SCALE
AS-SHOWN

NEITHER THIS DOCUMENT NOR ITS CONTENTS MAY BE USED OR REPRODUCED IN ANY MANNER WITHOUT WRITTEN AUTHORIZATION. © COPYRIGHT

THIRD ANGLE PROJECTION
A1 SHEET

TITLE
POBOYO 2000 TPD EXPANSION PROJECT
PROCESS PLANT AREA
ADSORPTION TANK 05 (4430-TK-106)
DETAIL OF NOZZLE 1/3

CLIENT NUM -
PROJ NUM PT0061.08
SHT: 1 OF 1
MARK NUM -
DRG NUM E2502-000-DWG-605
REV 00